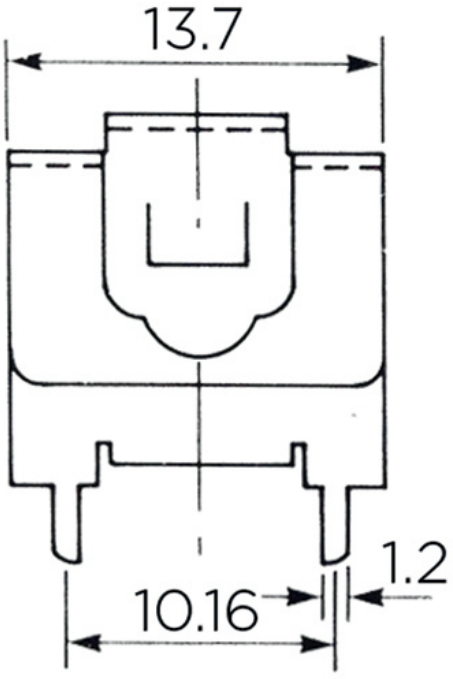
13.7
1.2
10.16

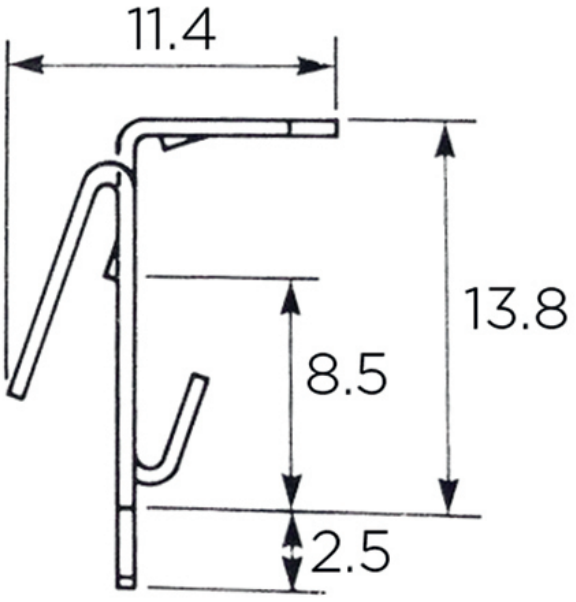
11.4
13.8
8.5
2.5